CHECKWEIGHER

A&D Weighing EZI-Check™

CHECKWEIGHER AD-4961 Series

IP65

Checkweighing Simplified!

A&D Weighing

www.andweighing.com.au

Best-in-class precision

With a newly developed digital load cell and an ultra-high speed processing module, high level precision of 0.08g (3σ)*1 has been realized.
With this high accuracy checkweigher, you can minimize the giveaway of materials above the specified weight and contribute to reductions in production costs.

7-inch color touch panel

The display utilizes a high visibility touch panel color LCD with user friendly Graphic User Interface (audio guidance support function included).

Image import from USB

Product images can be quickly uploaded to the checkweigher from a USB flash drive, making product identification and uploading fast and simple.

USB Flash Drive

IP65

Protected from dust and water to IP65 standards.
Hygienic design with the entire system washable.

Stores up to 1000 products

Products can be divided into 10 different groups, with up to 100 products able to be recorded within each group.

Lightweight and compact design

With its modular structure, the AD-4961 allows for rapid and simple installation or relocation.

Unique modular design

The AD-4961 consists of four units: infeed conveyor unit, weighing conveyor unit, control unit and base unit, allowing fast and simple assembly.
In the case of system shutdown, no need to wait for a service engineer to respond to the issue-simply replace the unresponsive module to shorten system downtime and maximize production efficiency.

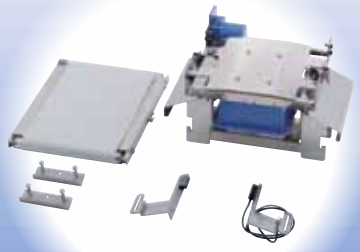

Infeed conveyor unit

Weighing conveyor unit

Control unit

Base unit

*1 For AD-4961-2KD-2035, accuracys depend on product shape / condition and instlation positioning.

Optimization of weighing configuration

By inputting throughput (products per minute) or belt speed (m/min), optimal weighing conditions can be automatically set, allowing for precision weighing without inputting various settings.

New functions

1. Feedback control

This function outputs the difference from the target value in filling and packing machines when there is a difference between the target and actual values (pulse width output method using DO output and zone output method using multiple DO outputs).

2. Weighing Mode

Addtion of Optimal Mode
Optimal mode extends the sampling time to ensure accuracy.

This mode is effective for measurement of small, light products and long (dimension) products.

Note: The judgment timer is extended leading to a throughput that is lower than standard judgment processing.

Additionally, rejection processing may not be received in time due to delayed judgment output of rejectors connected at subsequent stages.

3. Target weight tracking

The target weight tracking function calculates a moving average for weighing values and sets a new target value based on the target, high limit and lower limit values and the settings for the target weight tracking. This function allows the checkweigher to perform checkweighing while tracking changes in weight of the products. Select “Enable” to use the target weight tracking function.

4. Reject confirmation

Reject confirmation is a function for monitoring products using a photosensor that is attached to the ending side of the flow, such as the passing or discharging side of a rejector.
Allows users to check for errors in which products other than those specified pass as OK.

5. DO (Digital Output) additional features

Consecutive Fail, Error Output, Total Number Count, Conforming Item Count
Bin Full, Reject Confirmation

6. DI (Digital Input) additional features

Air Pressure Error, Bin Full, Emergency Stop, Reject Confirmation

7. Dump Printing

Print raw data summary results or statistical data on an RS-232C connected printer capable of dump printing (such as the AD-8126).
Print the raw summary data or weighing data from processing small numbers (approximately 100pcs/min or less).
Data can be sent to a serial connected computer if desired.

8. Serial connection

Weighing results transmitted by RS-232C after each measurement.

History function

Operational history

The history of configuration changes can be recorded and displayed.
Suitable for use in HACCP programs along with the weighing history function.

Users can be registered and their scope of permitted operations controlled according to 4 management levels.

- [Operator]
- [Supervisor]
- [Quality Manager]
- [Administrator]

By assigning each user to the appropriate level of access, inadvertent operations can be avoided.*2

*2 "Operator" is set when the power is turned on.

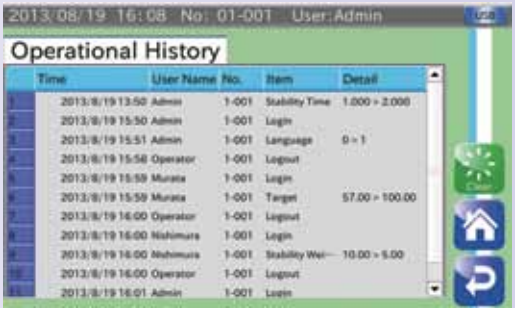

Weighing history

Weighing results are automatically recorded in a USB flash drive during weighing.
Output data: date, time, group product number, weight data and judgments.

Weighing history output example:

```
2016/10/3, 19:45:52, 40, 01–001, 100.05, OK
2016/10/3, 19:45:56, 54, 01–001, 150.1, Over
2016/10/3, 19:46:00, 58, 01–001, 70.5, Under
2016/10/3, 19:46:04, 52, 01–001, 0.0, Detect Two
2016/10/3, 19:46:08, 56, 01–001, 0.0, Unsplit
2016/10/3, 19:46:12, 60, 01–001, 100.5, Metal
2016/10/3, 19:46:16, 54, 01–001, 105.1, Ext 1
2016/10/3, 19:46:20, 78, 01–001, 95.5, Ext 2
```

Date | Time | Group / Product number | Weight | Judgment

Only USB memory formatted in FAT32 can be used.
The weighing history that is outputed to the USB memory is saved in the memory root in CSV format.

USB memory

Approx. 6MB memory size is required for 8 hours operation at the maximum throughput (320pcs/min.)
Approx. 7GB memory size is required for 24 hours 365 days operation. *USB Flash Drive not included.

Modbus® communication

Equipped with Modbus RTU/Modbus TCP as standard.
With Modbus communication, seamless connection can be easily achieved.
Operations such as stop and start weighing, collecting data and changing product can all be set from an external device.

Various inputs / outputs

Rejector output, alarm output, metal detector input, RS-232C, TCP/IP and USB interfaces are equipped as standard.
Storing data in a USB flash drive or outputting to a printer are also possible.

Ethernet based printer

Histogram, X/R control charts and summary reports can be outputted to a PostScript printer via Ethernet.

Data summary

Various summary data such as histograms (frequency including defects), X charts, R charts, total summaries, and others are available.
You can visually confirm fluctuation of weighing results and adjust your manufacturing machine accordingly.

Histogram, control charts and summary reports

After weighing, press the PDF key on the summary display. A PDF report is outputted to a USB flash drive.
The same reports can be printed out by pressing the PRINT key when a PostScript printer is connected to the checkweigher.

Histogram printing example

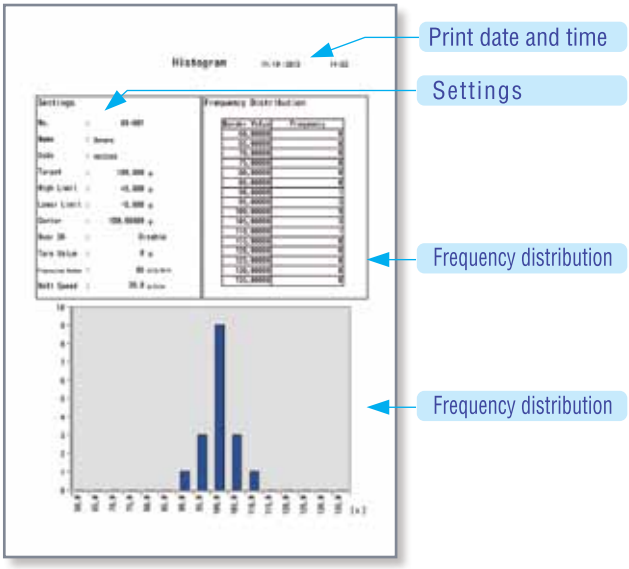

Control chart printing example

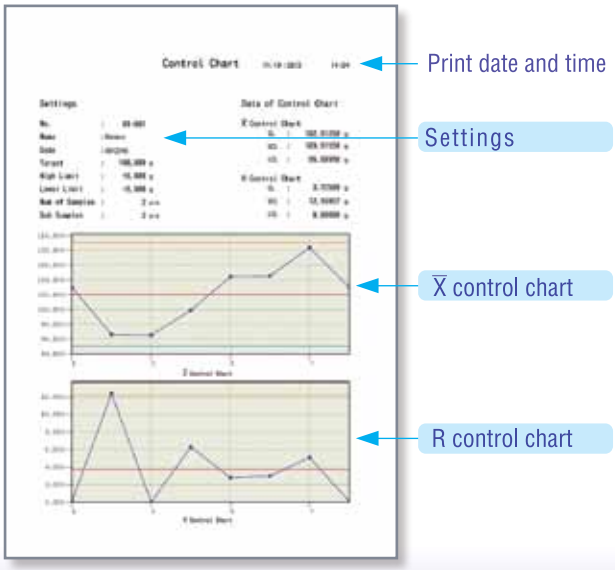

Summary results printing example

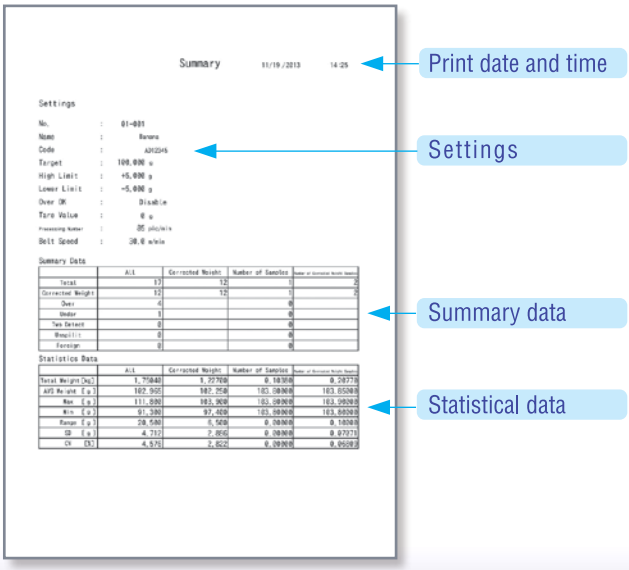

USB memory function

Weighing history and operation history are stored in a USB flash drive.
You can also output histogram, X/R control charts or summary data to a USB flash drive in PDF format.
A USB flash drive needs to be inserted before weighing.

*USB Flash Drive not included.

AD-4961-600-1224

Capacity **600g** | Conveyor belt width **120mm**

Specifications

Model	AD-4961-600-1224
Capacity	600g
Resolution	0.01g
Accuracy (3σ)*1	0.08g
Max. throughput	400pcs/min
Conveyor belt width	120mm
Conveyor length	Weighing: 240mm Infeed: 360mm
Transport medium	Urethane belt
Conveyor belt speed	15 to 120m/min
Max. product dimensions	Length: 22 to 200mm Width: 120mm
Weighing sensor	Strain gauge load cell
Display	7inch touch panel color display (WVGA)
Operation method	Touch panel (resistive film type), operation buttons
Number of recorded items	1,000 items (10 groups x 100 items)
Communication functions	Modbus TCP / Modbus RTU / RS-232C/485 (selectable) / TCP/IP (PostScript printer) /
	USB (for PostScript printer, USB memory, data storage, image import use)*3
External input	Non-voltage contact input 4 points
External output	Relay output 8 points
Dust/water resistance specifications	IP65
Operation temperature/humidity range	–5 to 40°C/ humidity below 85% (with no condensation)
Power supply *4	Single phase AC100 to 240V (+10% / -15%), 50/60Hz 180VA
External dimensions *2	Length: 700mm / Width: 660mm / Height: 710 to 860mm
Weight *2	Approx. 35kg
Material	Display : ABS resin
	Conveyor unit : Aluminum (alumite coating) and PP resin
	Control box : Stainless steel
	Base unit : Stainless steel

*1 Depends on the shape and the condition of the product and installation environment.
*2 Values for external dimensions and weight are for the standard condition without rejector.
*3 USB memory must be formatted to FAT32.
*4 Please prepare a ⌀4-7mm power cable.

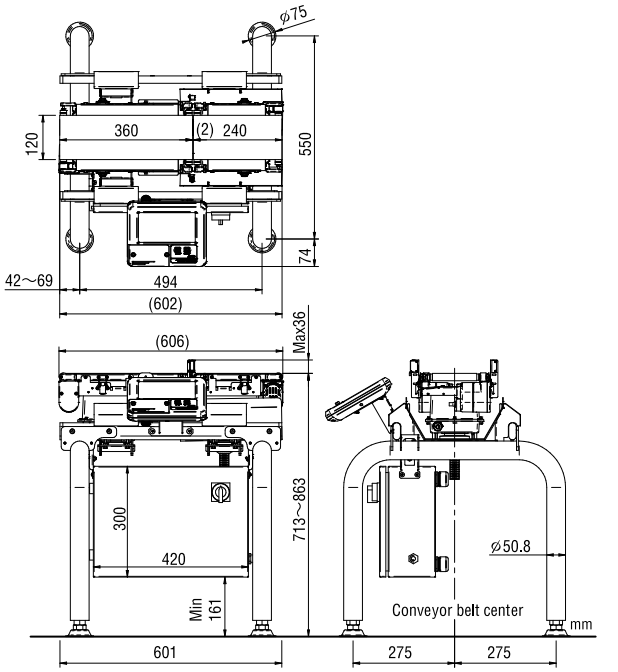

AD-4961-600-1224 External Dimensions

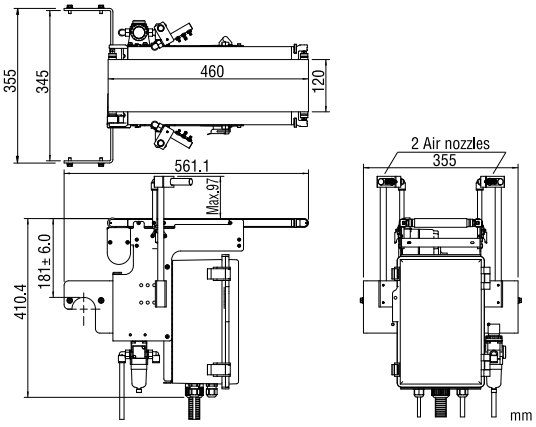

AD-4984-1246 External Dimensions

AD-4961-600-1224
with optional display stand, tower light, anti-static breeze break and air jet rejector

Anti-static breeze break
for AD-4961-600-1224

AD-4961-11-1224

Length: 320mm, Width: 263mm
Three stage pass height adjustable:
60mm, 105mm, and 150mm
Material: PVC anti-static plate

Air jet rejector for AD-4961-600-1224

AD-4984-1246

Three-way rejection (two air nozzles)
Screening capability: 400pcs/min.
Please prepare an air compressor with a φ10mm air tube for connection to the filter regulator of the rejector.
Air supply: 0.5Mpa, 2.6NL/time

AD-4961-2KD-2035 Capacity 2,000g Conveyor belt width 200mm

Specifications

Model	AD-4961-2KD-2035
Capacity	500g / 2,000g
Resolution	0.01g / 0.1g
Accuracy (3σ)*1	0.08g / 0.18g
Max. throughput	320pcs/min
Conveyor belt width	200mm
Conveyor length	350mm
Transport medium	Urethane belt
Conveyor belt speed	15 to 120m/min
Max. product dimensions	Length:30 to 300mm Width:200mm
Weighing sensor	Strain gauge load cell
Display	7inch touch panel color display (WVGA)
Operation method	Touch panel (resistive film type), operation buttons
Number of recorded items	1,000 items (10 groups x 100 items)
Communication functions	Modbus TCP / Modbus RTU / RS-232C/485 (selectable) / TCP/IP (PostScript printer)
	/ USB (for PostScript printer, USB memory, data storage, image import use)*3
External input	Non-voltage contact input 4 points
External output	Relay output 8 points
Dust/water resistance specifications	IP65
Operation temperature/humidity range	–5 to 40°C/ humidity below 85% (with no condensation)
Power supply *4	Single phase AC100 to 240V (+10% / -15%), 50/60Hz 180VA
External dimensions *2	Length:700mm / Width:660mm / Height:710 to 860mm
Weight *2	Approx. 35kg
Material	Display : ABS resin
	Conveyor unit : Aluminum (alumite coating) and PP resin
	Control box : Stainless steel
	Base unit : Stainless steel

*1 Depends on the shape and the condition of the product and installation environment.
*2 Values for external dimensions and weight are for the standard condition without rejector.
*3 USB memory must be formatted to FAT32.
*4 Please prepare a ⌀4-7mm power cable.

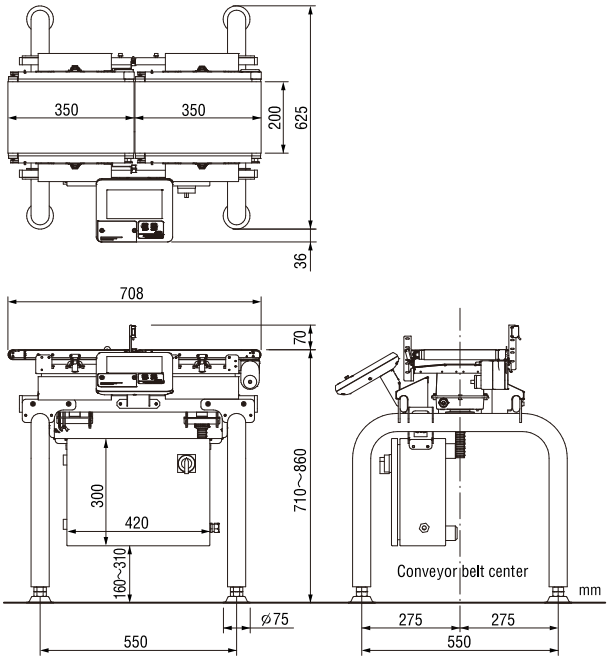

AD-4961-2KD-2035 External Dimensions

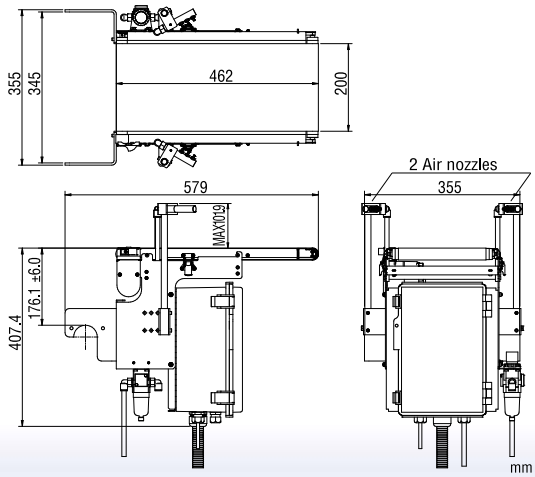

AD-4984-2046 External Dimensions

AD-4961-2KD-2035
Checkweigher with flipper rejector

Air jet rejector for AD-4961-2KD-2035 AD-4984-2046

Three-way rejection (two air nozzles)
Screening capability: 320pcs/min.
Please prepare an air compressor with a 10mm air tube for connection to the filter regulator of the rejector.
Air supply: 0.5Mpa, 2.6NL/time

AD-4961-6K-3050 Capacity 6,000g Conveyor belt width 300mm

Specifications

Model	AD-4961-6K-3050
Capacity	6,000g
Resolution	0.1g
Accuracy (3σ)*1	1.0g
Max. throughput	145pcs / min
Conveyor belt width	300mm
Conveyor length	500mm
Transport medium	Urethane belt
Conveyor belt speed	10 to 80m / min
Max. product dimensions	Length : 80 to 450mm Width : 300mm
Weighing sensor	Strain gauge load cell
Display	7inch touch panel color display (WVGA)
Operation method	Touch panel (resistive film type), operation buttons
Number of recorded items	1,000 items (10 groups x 100 items)
Communication functions	Modbus TCP / Modbus RTU / RS-232C/485 (selectable) / TCP/IP (PostScript printer) / USB (for PostScript printer, USB memory, data storage, image import use)*3
External input	Non-voltage contact input 4 points
External output	Relay output 8 points
Dust/water resistance specifications	IP65
Operation temperature/humidity range	–5 to 40°C/ humidity below 85% (with no condensation)
Power supply *4	Single phase AC100 to 240V (+10% / -15%), 50/60Hz 180VA
External dimensions *2	Length : 1005mm / Width : 736mm / Height : 720 to 870mm
Weight *2	Approx. 50kg
Material	Display : ABS resin
	Conveyor unit : Aluminum (alumite coating) and PP resin
	Control box : Stainless steel
	Base unit : Stainless steel

*1 Depends on the shape and the condition of the product and installation environment.
*2 Values for external dimensions and weight are for the standard condition without rejector.
*3 USB memory must be formatted to FAT32.
*4 Please prepare a ⌀4-7mm power cable.

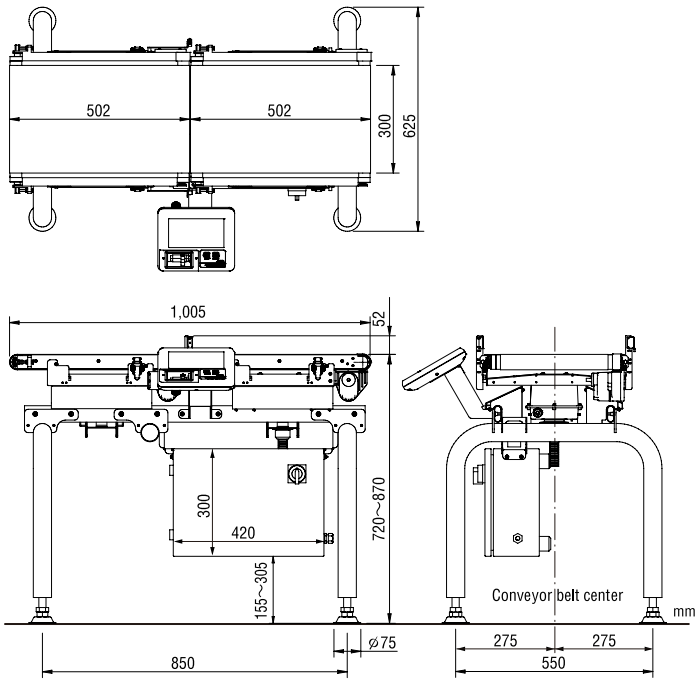

AD-4961-6K-3050 External Dimensions

AD-4961-6K-3050
Checkweigher with optional display stand, tower light and pusher rejector

Options

Display stand
AD-4961-01

The display is attached on the opposite side from the standard display position, across from the user. The display is located approx. 310mm above the conveyor belt.

Tower light
AD-4961-02

Highly visible three color LED tower light.
Easy configuration with the AD-4961 checkweigher using DO (Digital Output) map setting.

*AD-4961-01 display stand is required to install this option.
*Dust and water resistance level is IP53.

Anti-static upper breeze break
AD-4961-11

Anti-static breeze break prevents air currents to the weighing conveyor and static electricity to achieve accurate weighing. Clearance between the conveyor belt and the breeze break is 135mm. Usage together with the lower breeze break is recommended.
Material : PVC anti-static plate

*This option is for AD-4961-2KD-2035.

Lower breeze break
AD-4961-12

Prevents air currents from underneath the system to ensure accurate weighing.
Usage together with the upper breeze break is recommended.
Material : Stainless steel

*This option is for AD-4961-2KD-2035.

Cross plate
AD-4961-13

Eliminates gaps between infeed conveyors and weighing conveyors to transfer products smoothly.
Suitable for weighing small products.
Material : Stainless steel

*This option is for AD-4961-2KD-2035.

Installation image

Product guide
AD-4961-14

Installed on both infeed and weighing conveyors.
Adjusts products to be conveyed on the center of both conveyors.
Applicable product width is from 50mm to 100mm.
Material : Stainless steel

*This option is for AD-4961-2KD-2035.

Installation image

Rejector for AD-4961-2KD-2035

Please prepare an air compressor with a ⌀6mm air tube for connection to the filter regulator of the rejector.
Air supply : 0.5MPa, 0.1NL/time

Flipper type rejector

AD-4981-2057
Screening capability
120pcs/min.

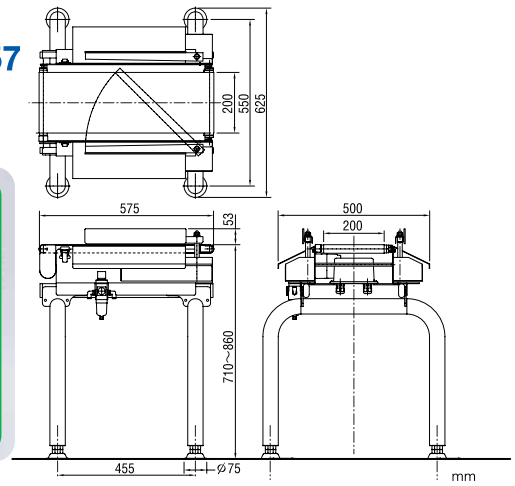

Conveyor drop rejector

AD-4982-2035
Screening capability
150pcs/min.

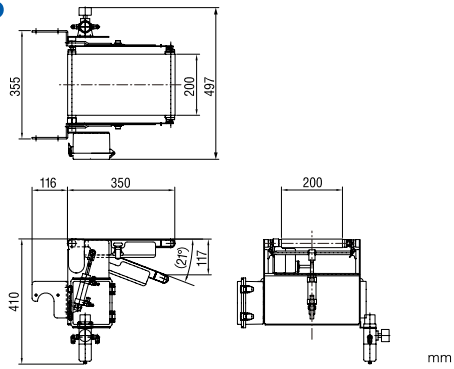

Rejector for AD-4961-6K-3050

Please prepare an air compressor with a ⌀6mm air tube for connection to the filter regulator of the rejector.
Air supply : 0.5MPa, 3.0NL/time

Pusher rejector

AD-4983-3050
Screening capability
60pcs/min.

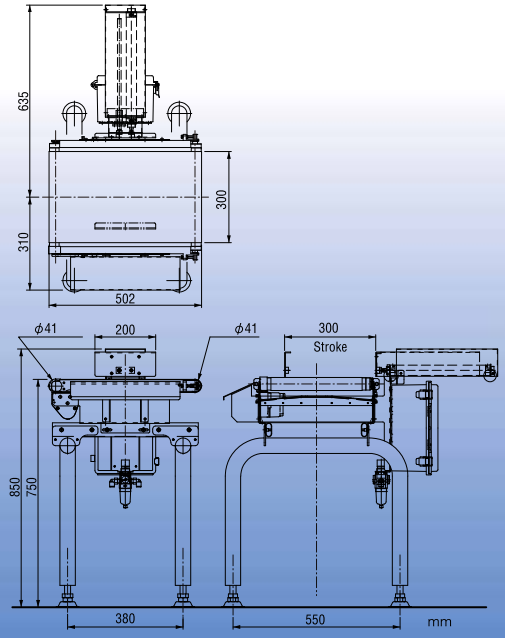

Unit supply

for AD-4961-2KD-2035

We supply checkweigher modules individually, allowing you to build a weighing system which

Weighing unit
AD-4961-2K-WU

High accuracy digital output module.
Stopper mechanism protects the load cell from overload.
Easy connection to the AD-4961-CNT control unit.
Dust and waterproof to IP65.
Motor cable included.

Motor base unit
AD-4961-2035-MOB

Motor base unit for 200mm width conveyor belt.
Motor unit is pre-installed.
Dust and waterproof to IP65 when used with the AX-KO4223-080 cable.
2 sets are required for the infeed conveyor and the weighing conveyor.

Weighing conveyor unit
AD-4961-2035-WCV

A conveyor unit with balance adjusted pulleys enables accurate weighing.
*Different from the infeed conveyor unit.

Color touch panel display unit
AD-4961-DISP

7 inch color touch panel display with a USB memory port.
Easy connection to the AD-4961-CNT control unit.

Control unit
AD-4961-CNT

Water and dust proof to IP65.

Communication functions:
Modbus TCP/Modbus RTU (RS485)
RS232C/RS485 (selectable)
TCP/IP for PostScript printer
USB(USB memory for storing data, capturing images and connection to a PostScript printer.)

Base functions:
Item registration: 1000 items
Non-voltage inputs: 4 points
Relay outputs: 8 points
Power supply: Single phase AC100-240V

Load cell connection:
Please use the AD-4961-2K-WU

Infeed unit
AD-4961-INF

Conveyor height can be adjusted with this unit.

Attachment brackets
AD-4961-UF

Attachment brackets to fix the infeed unit and weighing unit.

* 2 sets are required for the infeed unit and the weighing unit.

* 2 sets are shown in the photo.

Infeed conveyor unit
AD-4961-2035-ICV

*The pulleys for the infeed conveyor unit are not balance adjusted.
The conveyor belt is different from the one for the weighing conveyor.

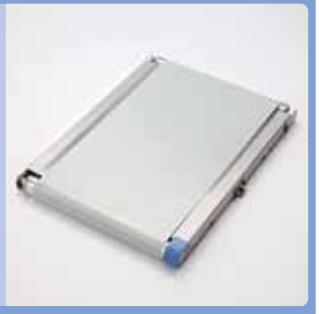

Base unit
AD-4961-2035-FP

Consists of feet and side beams.
2 sets of AD-4961-UF are installed on the base unit.

Photo sensor with attachment
AD-4961-81-2K

fits your production lines.

Attachment for the display unit
AD-4961-80-2K

*Display is not included.

Motor cable
for the infeed conveyor
AX-KO4223-080

*Motor is not included.

Maintenance kit for AD-4961-2KD-2035

AD-4961-2035-MNT

The maintenance kit contains disposable parts that need to be replaced periodically.
These maintenance parts are easy to replace, so system downtime can be minimized.

Replacing a belt

Replacing a gear

Replacing a conveyor

Replacing a gear motor

Both the drive pulley and the idle pulley are balance adjusted,
so they can be installed to either the infeed conveyor or the weighing conveyor.

The pulleys that were originally installed to the infeed conveyor should not be installed to the weighing conveyor.

A&D Australasia
ACN 007 556 809

Email: sales@andaustralasia.com.au
Internet page: www.andaustralasia.com.au

Head Office
32 Dew Street
THEBARTON South Australia 5031
Telephone (08) 8301 8100
Facsimile (08) 8352 7409

Victorian Office
Unit 38, 326 Settlement Road,
THOMASTOWN Victoria 3074
Telephone (03) 9372 1522
Facsimile (03) 9372 1193

New South Wales Office
Unit 4, 14 Abbott Road,
SEVEN HILLS New South Wales 2147
Telephone (02) 9674 5466
Facsimile (02) 9674 2544

Your Dealer